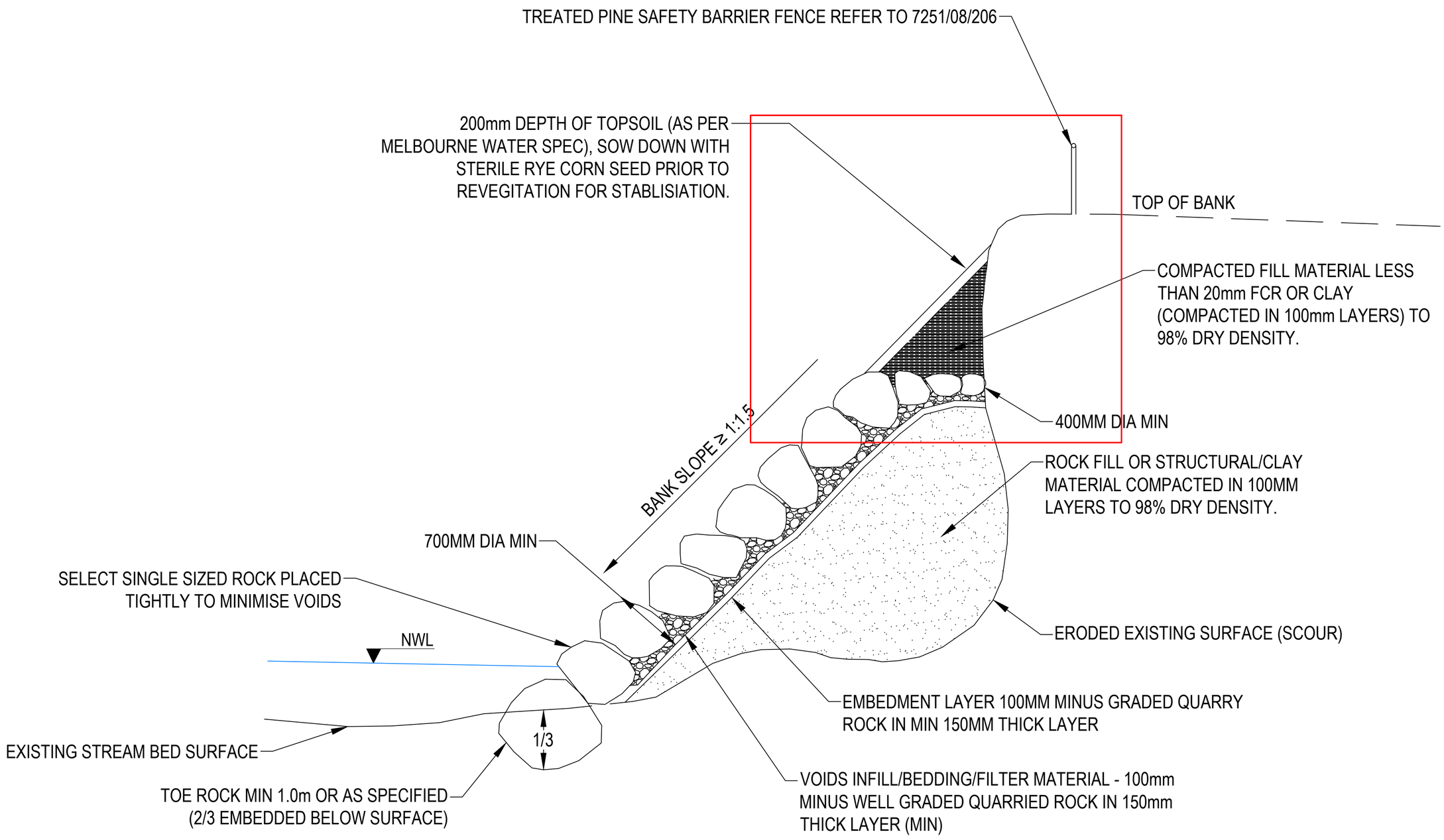

TYPICAL ROCK BANK STABILISATION SINGLE SIZED ROCK FILL ABOVE

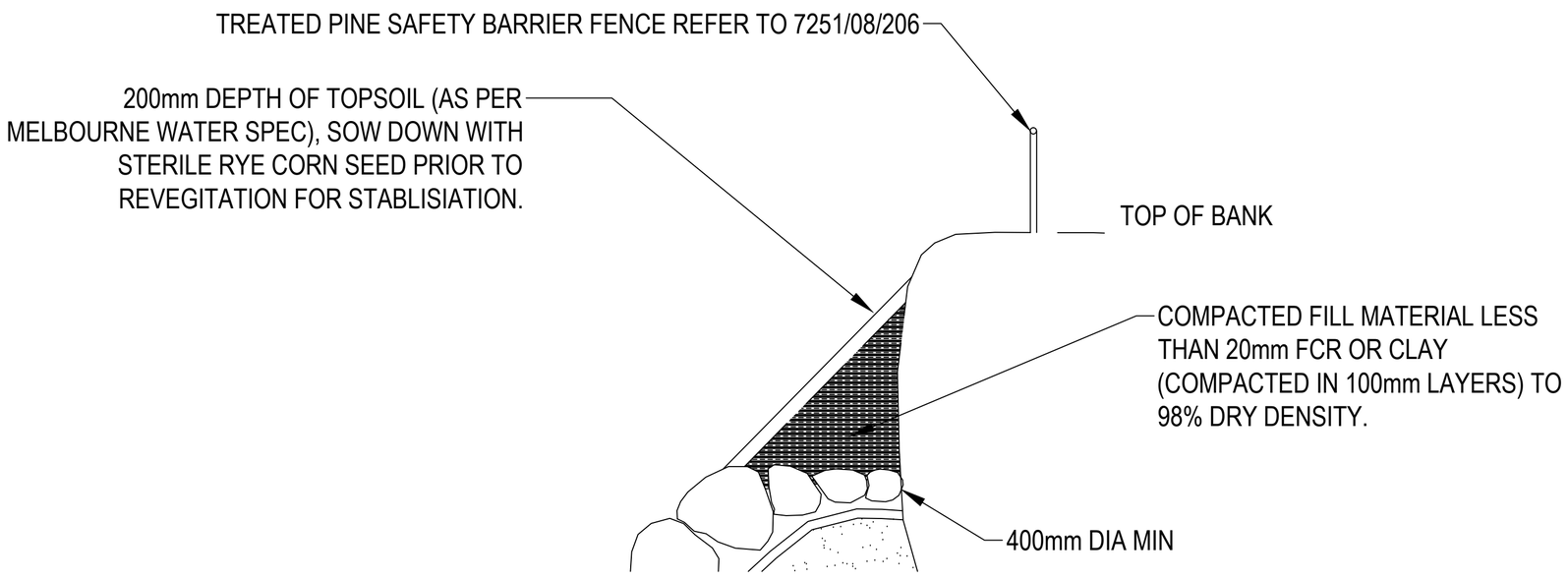

TYPICAL ROCK BANK STABILISATION SINGLE SIZED ROCK CUT ABOVE

NOTE:

- DEPENDING ON SCALE OF WORKS COMPACTION TESTING MAY BE REQUIRED
- ROCK SIZE GENERALLY MIN 2.5 TIMES THE MEDIAN SIZE (D50) OF THE MIXED ROCKWORK
- EXISTING WATERWAYS ONLY, NOT SUITABLE FOR DEVELOPERS SITES.

CONCEPT ONLY
NOT TO SCALE

REV	DESCRIPTION	COMPANY	PROJECT OR WO NUMBER	DRAWN	ENG. CHECK	PR. MAN. APP'D	DATE
A	NOTATION AMENDMENTS	MW	-	MK			17/12/18

DRAFTER | DESIGNER | DESIGN MANAGER APPROVAL | PROJECT MANAGER APPROVAL
DRAFTING CHECK | ENGINEERING REVIEW

TITLE
ROCKWORK DRAWING
BANK STABILISATION FOR batters ≥ 1 IN 1.5
(EXISTING WATERWATS ONLY - NOT DEVELOPERS SITES)

PROJECT DATUM | ORIGINAL SIZE
SCALE

CODE	MWC DRAWING NUMBER	REV
	7251/08/102	A