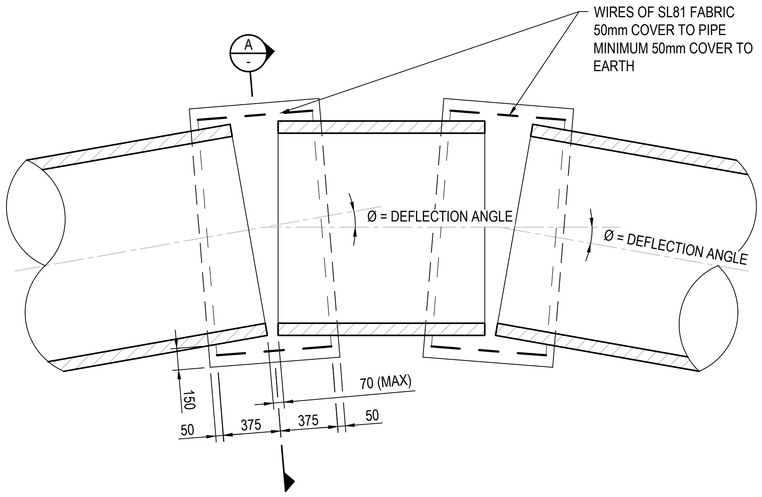

PLAN
PIPE BANDAGE

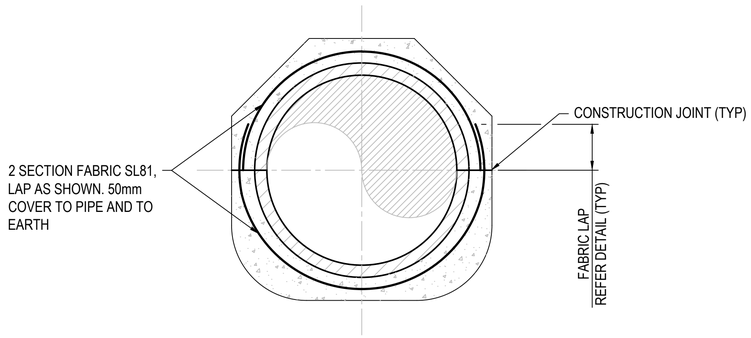

A - SECTION

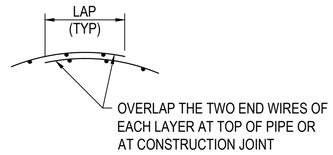

FABRIC LAP DETAIL

NOTES:

1. MAXIMUM DEFLECTION ANGLE Ø = 18° - D/150. FOR HORIZONTAL AND VERTICAL ALIGNMENTS (D IS IN mm).
2. MINIMUM COVER TO REINFORCEMENT = 50 mm.
3. CONCRETE SHALL BE S40 MPa MINIMUM WITH A MAXIMUM WATER CEMENT RATIO OF 0.50.
4. THIS DRG IS SUITABLE FOR PIPE DIAMETER RANGING FROM 300 mm TO 2400 mm.
5. CONCRETE FINISH TO BE SMOOTH INSIDE THE PIPE FOR THE FULL CIRCUMFERENCE.

REV	DESCRIPTION	COMPANY	PROJECT OR WO NUMBER	DRAWN	ENG. CHECK	PR. MAN. APP'D	DATE
A	FIRST REVISION			RD	VY	RM	25.11.15

COPYRIGHT
Copyright - This document is the property of Melbourne Water. Use or copying of the document in whole or in part, for other than Melbourne Water purposes, without the written permission of Melbourne Water constitutes an infringement of copyright.

Melbourne Water
DRAINAGE STANDARD DRAWINGS

DRAFTER	DESIGNER	DESIGN MANAGER APPROVAL	PROJECT MANAGER APPROVAL
RD	GT	RM	VY
DRAFTING CHECK	ENGINEERING REVIEW		
BS	VY		

TITLE **SPLAY PIPES AND PIPE BANDAGE JOINTS**

PROJECT DATUM
SCALE NTS
Original Size **A1**

MELBOURNE WATER CORPORATION

CODE	MWC DRAWING NUMBER	REV
	7251/08/420	A